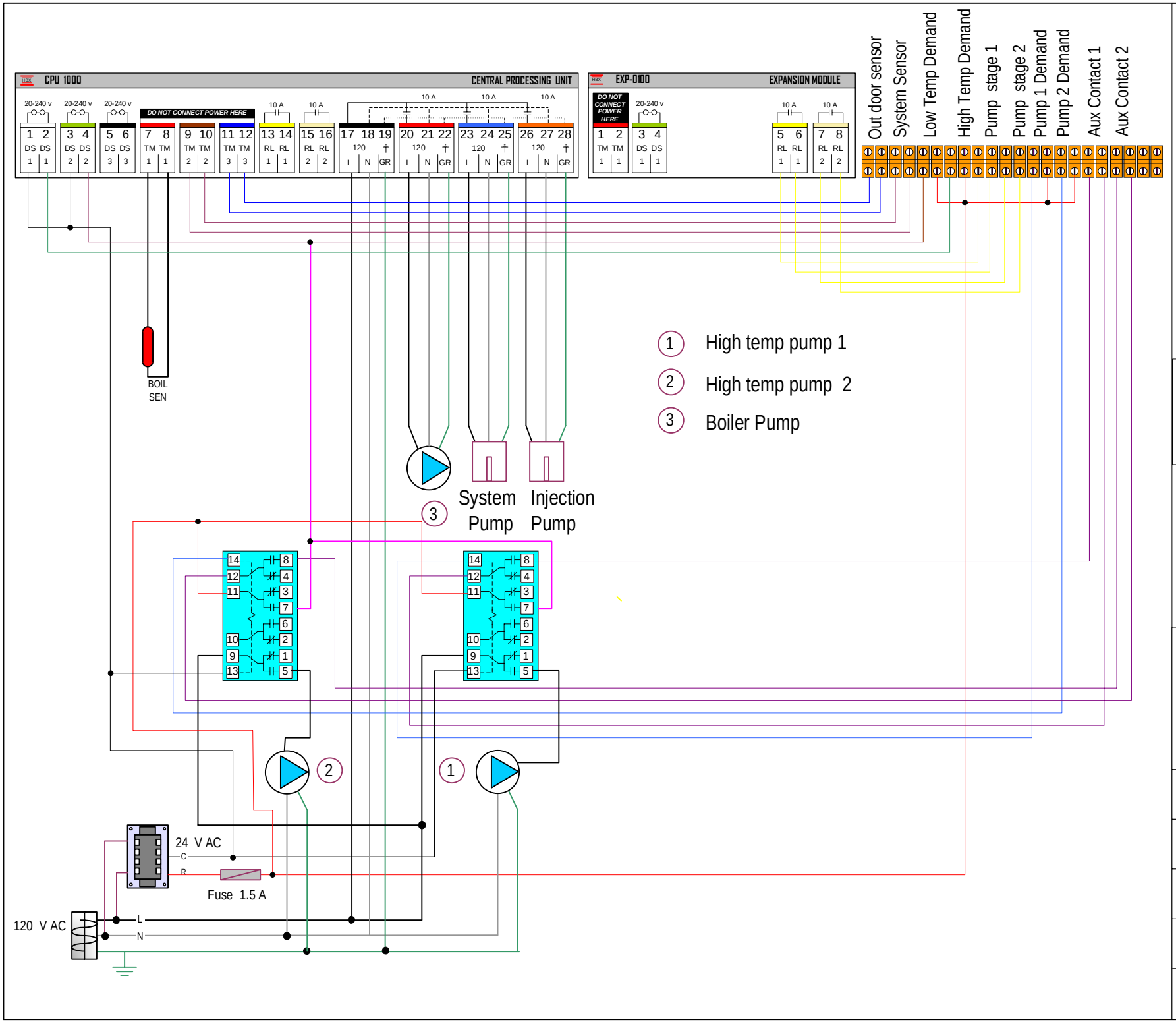

Tamas
Hydronic systems Inc.

T-BO-00-3202
Boiler Flow panel
2 High temp zone
Wiring Diagram

Title:
T-BO-00-3202
Electrical Schematic Drawing.

DWG No: 06030706

Designed BY: TH

Scale : NS

Date : 8 March 2006